AVK SERIES 570 RESILIENT SEATED GATE VALVES INSTALLATION, OPERATION & MAINTENANCE MANUAL

Instruction for use

Thank you for selecting an AVK product. With correct use, the product is guaranteed to deliver a long and reliable service. This manual has been prepared to assist you with the installation, operation and maintenance of the valve to the maximum efficiency. For ease of reference, it has been divided into sections covering all aspects of use, and it is in the users best interests to read it and ensure that it is fully understood.

Health and Safety

It is always recommended that wherever work is being carried out on a valve that the valve is fully depressurised prior to carrying it out, and for the convenience draining of the line may be beneficial.

It is essential that the user of the valve is aware of the weight of the components and/or assembles that must be handled and manipulated during installation and maintenance. It is the users responsibility to ensure that safe working practices are followed at all times.

Whenever AVK products are installed, operated, or maintained, it is essential that the staff that undertake these operations be adequately trained. The hazards of pressurised liquids and gases can be severe, and it is the responsibility of the users to ensure that trained, competent staff undertake these duties. This manual has been designed to assist, but it can never fully replace quality training in the workplace. AVK technical staff will always be available to answer any questions relating to specific problems that may not be covered by this manual.

AVK products are designed and manufactured to be fit for purpose, and to a high and reliable standard. This provides a safe product with minimum risk to health when used correctly for the purpose for which it was designed. However, this assumes that the equipment is used and maintained in accordance with the manual, and the user is advised to study this manual, and to make it available to all staff that may need to refer to it.

AVK cannot be held responsible for any incidents arising from incorrect installation, operation or maintenance. The responsibility for this must rest wholly with the user.

1. Introduction

AVK series 570 gate valves are available in DN80 to DN400. The valve has a full and straight bore corresponding to the nominal diameter and can be installed independent of the flow direction. To keep the advantage of the full and straight bore vertical installation is recommended, however, flow/pressure limitations outlined below should be observed.

The valves are 100% factory tested hydrostatically.

IT IS IMPORTANT TO STATE OPERATING TEMPERATURE, PRESSURE, MEDIUM AND OPERATING CONDITIONS WITH ENQUIRIES/ORDERS, SO THE MOST SUITABLE VALVE WILL BE SUPPLIED FOR YOUR SPECIFIC PURPOSE.

Materials:

Castings (body, bonnet & stem cap)
Ductile Iron, 500-7 to AS 1831

Coating
Fusion bonded epoxy (FBE)

Stem
Stainless Steel 431

Gland flange
Stainless Steel CF8M

Wedge
Ductile Iron, with EPDM rubber

Bolts (bonnet & gland flange)
Grade A4-70 (SS 316), sealed with hot melt

Refer to individual datasheets for specific information

Series 570/90	DN80-400
Series 570/92	DN80-400
Series 570/98	DN80-400

570/90
DN80-400

570/92
DN80-400

570/98
DN80-400

Component list

1. Valve body
2. Wedge casting
3. Wedge rubber
4. Stem nut
5. Stem
6. Bonnet bolts
7. Bonnet gasket
8. Bonnet
9. Hot melt seal
10. O-ring seal
11. Stem collar
12. O-ring seal
13. Gland flange
14. Bushing
15. O-ring seal
16. O-ring seals (2)
17. Gland bolts
18. Wiper ring
19. Stem cap
20. Stem cap bolt
21. Insert

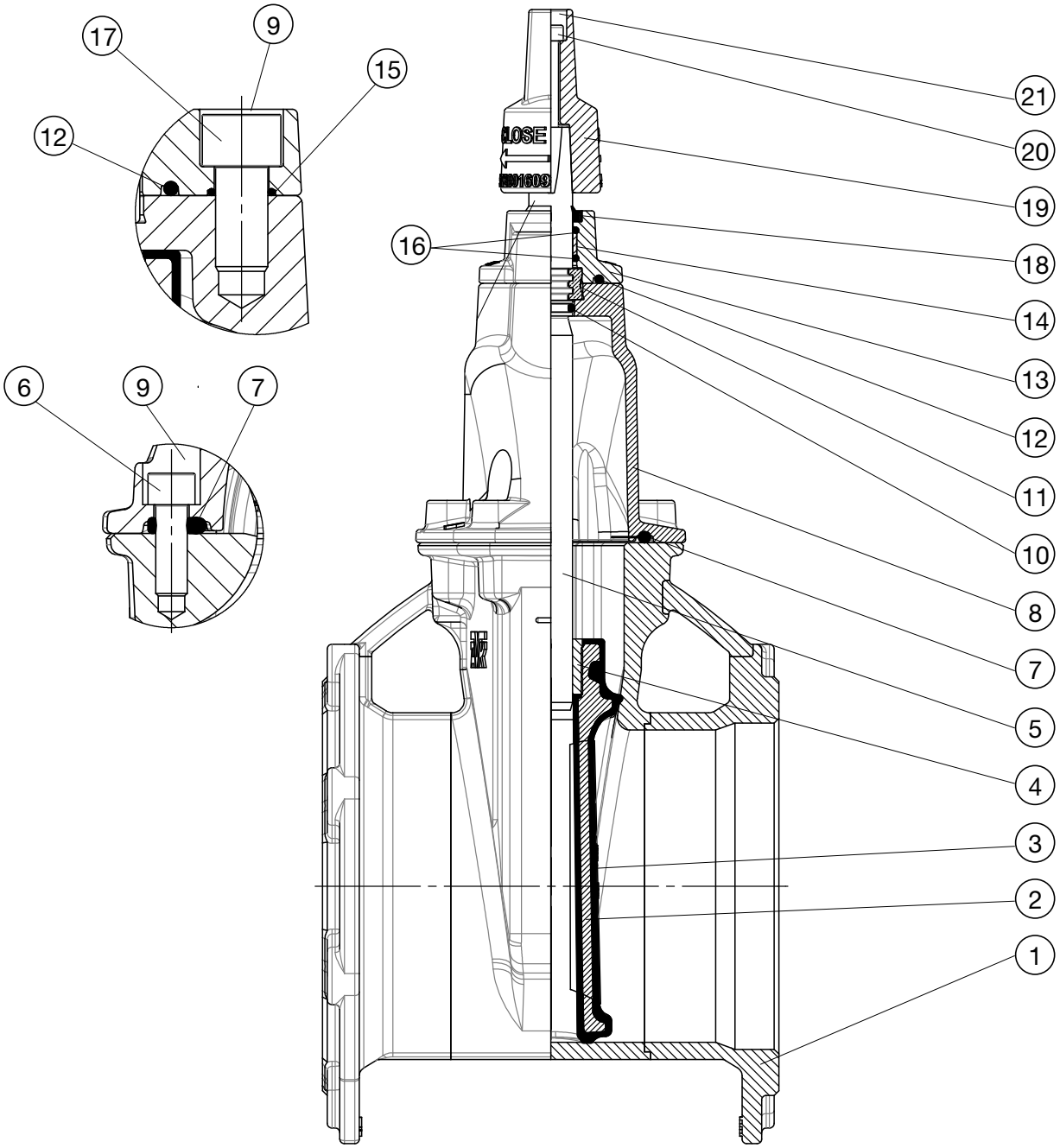

2. Installation

- When installing the gate valves, ensure that the seats and the end connections are clean.
- When valves are provided with lifting lugs, plates or eye nuts, these must be used to lift the valve.

2.1 Flanges

- To ensure adequate sealing it is important to select the correct type of gasket for the medium concerned, gaskets with the correct flange size must be used.
- Place valve between pipe flanges, and insert the bolts.
- Tighten bolts loosely.
- Tighten bolts in a diagonal sequence to ensure flanges are pulled parallel.
- Finally tighten bolts to correct torque levels as recommended in WSA 109.

2.1.1. Bolt size

The following table shows the bolt size to be used for corresponding valve dimensions.

	AS 4987-Fig. B5 AS 2129-Table D		AS 2129 Table E		AS 2129 Table F	
DN	Bolts	Quantity	Bolts	Quantity	Bolts	Quantity
50	M16	4	M16	4	M16	4
80	M16	4	M16	4	M16	8
100	M16	4	M16	8	M16	8
150	M16	8	M20	8	M20	12
200	M16	8	M20	8	M20	12
225	M16	8	-	-	-	-
250	M16	8	M20	12	M24	12
300	M20	12	M24	12	M24	16
375	M24	12	M24	12	M27	16
400	M24	12	M24	12	M27	20

3. Operation

Series 570 valves are suitable for use with clean water or neutral liquids up to 70°C. Minimum liquid temperature must be above freezing. Insulation is essential for external temperatures on 0°C to - 10°C. The valves can be operated manually by either ring key and bar, tee key, handwheel, gearbox or electric actuation. Direction of closing is on stem cap (19).

VALVE SERIES 570	SIZE mm	Turns to close (approx)
	DN80	19
	DN100	23
	DN150	27
	DN200	35
	DN225	39
	DN250	43
	DN300	52
	DN375	55
	DN400	59

* All torque values in accordance with Australian Standards (AS/NZS 2638.2:2011).

4. Maintenance

4.1. General

The valve is designed for underground use with minimum maintenance and requires no lubrication.

In the event of a spares replacement becoming necessary the recommended procedure is as follows:

4.2 Replacement of Stem Seals

Component list

1. Valve body
2. Wedge casting
3. Wedge rubber
4. Stem nut
5. Stem
6. Bonnet bolts
7. Bonnet gasket
8. Bonnet
9. Hot melt seal
10. O-ring seal
11. Stem collar
12. O-ring seal
13. Gland flange
14. Bushing
15. O-ring seal
16. O-ring seals (2)
17. Gland bolts
18. Wiper ring
19. Stem cap
20. Stem cap bolt
21. Insert

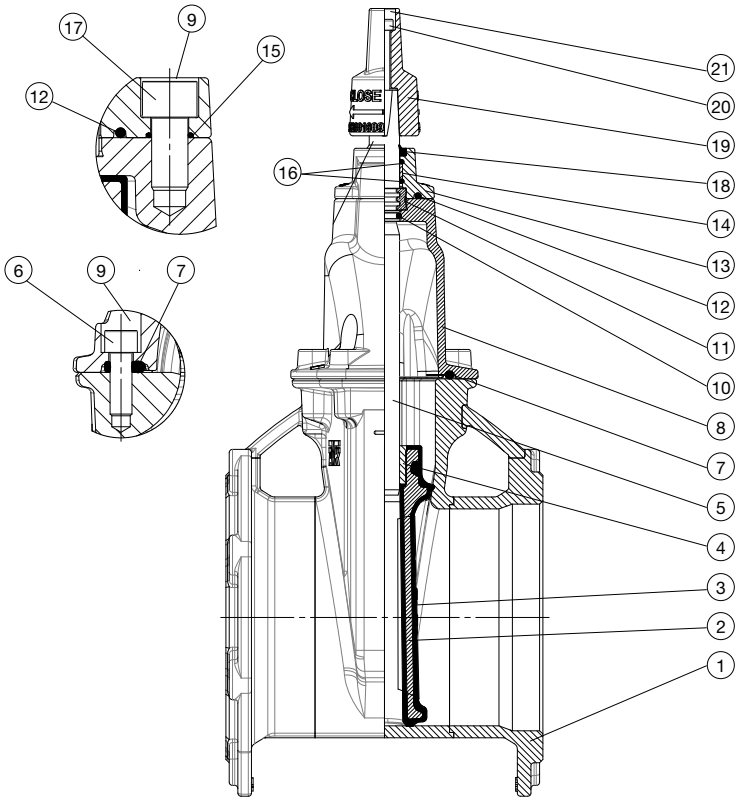

This can be carried out with valve under pressure in the pipeline, but take care over step ‘a’ to ensure a seal is formed between wedge and bonnet.

a) Fully open valve to ensure it is back-seated.
b) In the case of a stem cap being fitted carefully prise out plastic insert (21). Remove stem cap bolt (20) and stem cap (19).
c) Remove hot melt seal and 2 socket head cap bolts (17) on top of gland flange (13).
d) Gland flange (13) can now be lifted clear of stem (5) allowing access to the stem sealing arrangement. Lift clear of stem and replace the 2 ‘O’ Rings (16). Refit bushing (14) on stem taking care not to nip or tear the new ‘O’ Rings.
e) Refit gland flange (13) with a new gland flange o-ring (12) and 2 bolt o-rings (15) and tighten the 2 socket head cap bolts (17) using a torque wrench set at 35 Nm.
f) Refit stem cap assembly i.e. (19) (20) (21).
g) Close wedge by a few turns and check the integrity of the new seal arrangement.
h) Reseal bolt heads to prevent ingress of moisture and debris. Use only non-acetic cure silicone sealant.

4.3 Replacement of Wedge

Component list

1. Valve body
2. Wedge casting
3. Wedge rubber
4. Stem nut
5. Stem
6. Bonnet bolts
7. Bonnet gasket
8. Bonnet
9. Hot melt seal
10. O-ring seal
11. Stem collar
12. O-ring seal
13. Gland flange
14. Bushing
15. O-ring seal
16. O-ring seals (2)
17. Gland bolts
18. Wiper ring
19. Stem cap
20. Stem cap bolt
21. Insert

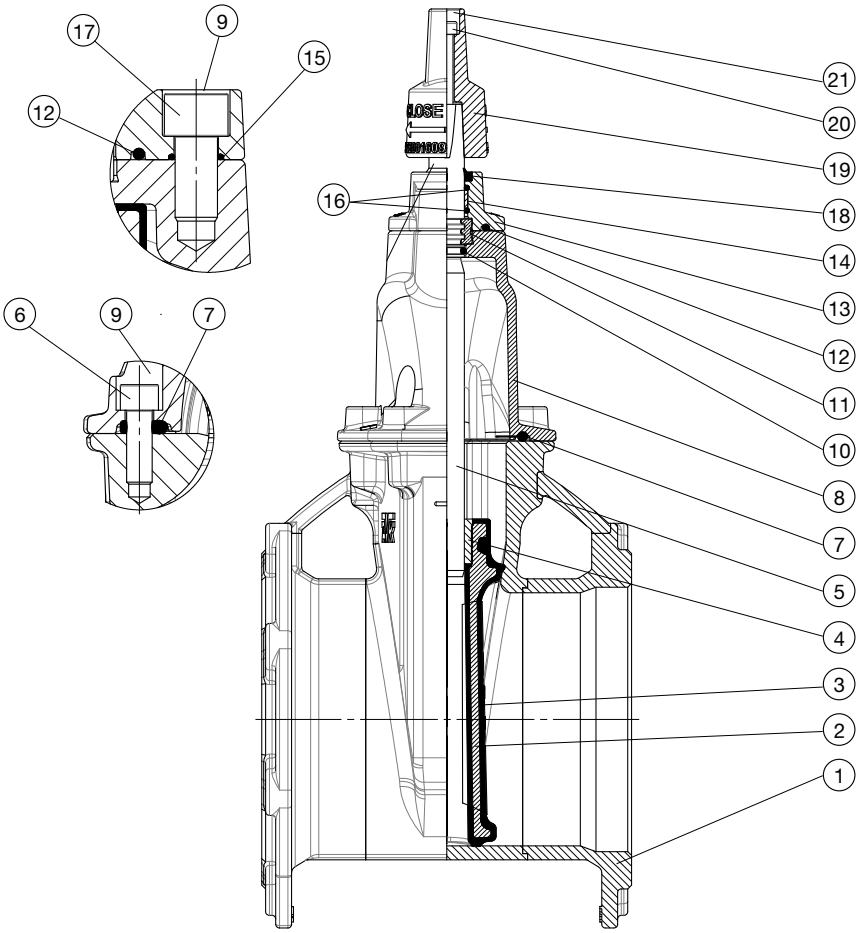

a) Isolate valve and ensure there is no pressure in the pipeline.

b) Adjust handwheel or stem cap to put the wedge into a slightly open position.

c) Remove hot melt/screw cover to expose bonnet bolts (6) then remove bolts.

d) Lift the entire bonnet assembly (8) and wedge (3) clear of valve body (1).

e) Unscrew wedge (3) from the stem (5).

f) Fit new wedge by reversing step ‘e’, take care that the wedge is in a mid-position on the stem so that when refitting it will be clear of the base and body.

g) Replace bonnet gasket (7). It is suggested that the bonnet bolts (6) are inserted into the bonnet holes first and then the gasket (7) is fitted over them. The whole bonnet assembly can now be refitted onto the body (1).

h) Tighten the bonnet bolts (6) using a torque wrench following a diagonal sequence over 3 stages. Initial stage: torque wrench setting 25-30Nm, intermediate stage: 40-50Nm, final stage: 60Nm.

i) Check integrity of seal by re-charging the main.

j) Should any leakage be found recheck bonnet bolt tightness using a torque wrench set at the final stage detailed in (h). Should leakage continue to occur, remove bonnet and check gasket and gasket sealing area for any damage. Replace or repair components as required.

k) Reseal bolt heads to prevent ingress of moisture and debris. Use only non-acetic cure silicone sealant.

4.4 Replacement of Stem Seal 'O' Ring (Item 10)

Component list

1. Valve body
2. Wedge casting
3. Wedge rubber
4. Stem nut
5. Stem
6. Bonnet bolts
7. Bonnet gasket
8. Bonnet
9. Hot melt seal
10. O-ring seal
11. Stem collar
12. O-ring seal
13. Gland flange
14. Bushing
15. O-ring seal
16. O-ring seals (2)
17. Gland bolts
18. Wiper ring
19. Stem cap
20. Stem cap bolt
21. Insert

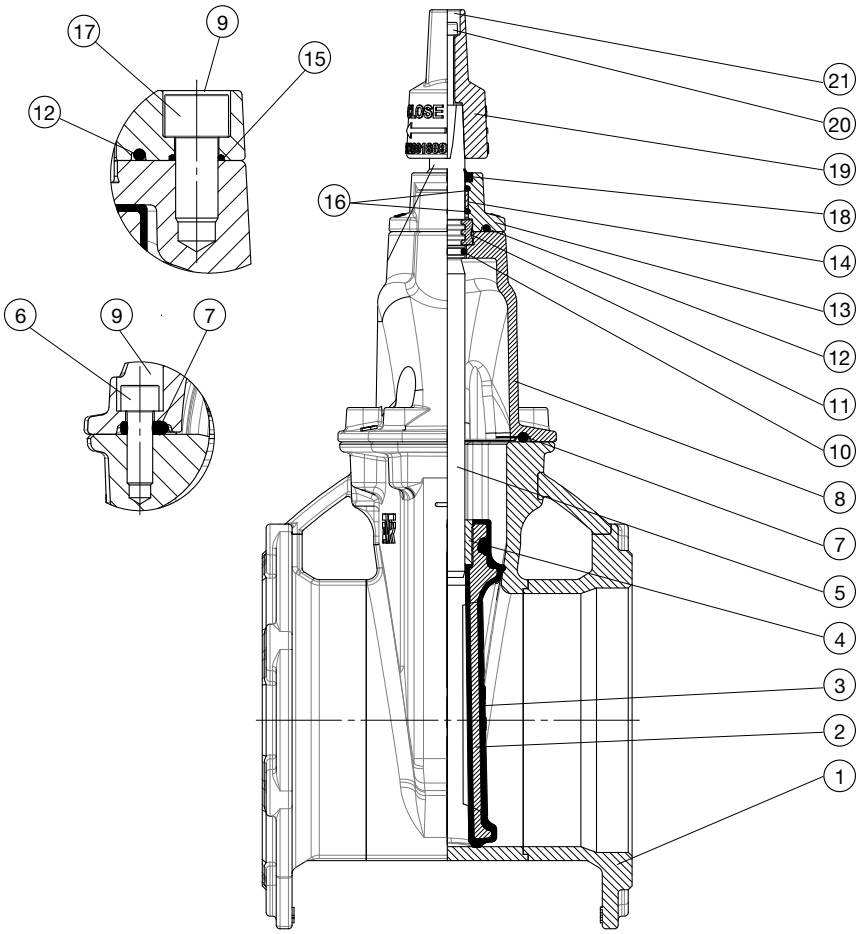

a) **Isolate** valve and ensure there is **no pressure** in the pipeline.

b) Turn keyed stem to put the wedge into a slightly open position.

c) In the case of a stem cap being fitted carefully prise out plastic insert (21).
Remove stem cap bolt (20) and stem cap (19).

d) Remove hot melt seal and 2 socket head cap bolts (17) on top of gland flange (13).

e) The gland flange (13) can now be lifted clear of stem (5) allowing access to the stem seal arrangement.

f) Fully close the valve in order to raise the stem (5) clear of the bonnet (8) ensuring that the two stem collars (11) are retained for re-assembly.

g) Remove stem seal o-ring (10) and replace with a new o-ring (10), grease the o-ring with Water Regulations approved grease e.g. Rocol Aqua-Sil.

h) Replace the two 'O' rings (16) and nylon bushing (14) in the glandflange (13). Grease internally using the approved grease. Grease thrust collar grooves in stem (5). Screw stem (5) back into wedge (3) whilst fitting stem collars (11) ensuring they seat fully inside recess in bonnet (8).

i) Refit gland flange (13) with a new gland flange o-ring (12) and 2 bolt o-rings (15) and tighten the 2 socket head cap bolts (17) using a torque wrench set at 35 Nm.

j) Refit stem cap (19), bolt (20) and insert (21).

4.4 Replacement of Stem Seal 'O' Ring (Item 10) Continued...

k) Close wedge by a few turns and check the integrity of the new seal arrangement

l) To check the integrity of the new seal arrangement, it will be necessary to re-charge the main slowly and open and close the wedge (3) a few times.

m) Reseal bolt heads to prevent ingress of moisture and debris. Use only non-acetic cure silicone sealant.

NOTE: It is vitally **IMPORTANT** to ensure all air is vented prior to full charging the main.